ROGERS BROTHERS CORPORATION ALBION, PA. 16401		
MODEL	CY50GR98/51/24/102/3XAR	
CUSTOMER	FOR: STEPHENSON EQUIPMENT. INC.	
BY: KER	DATE: 4-28-23	PROP. NO.

ROGERS

... SINCE 1905

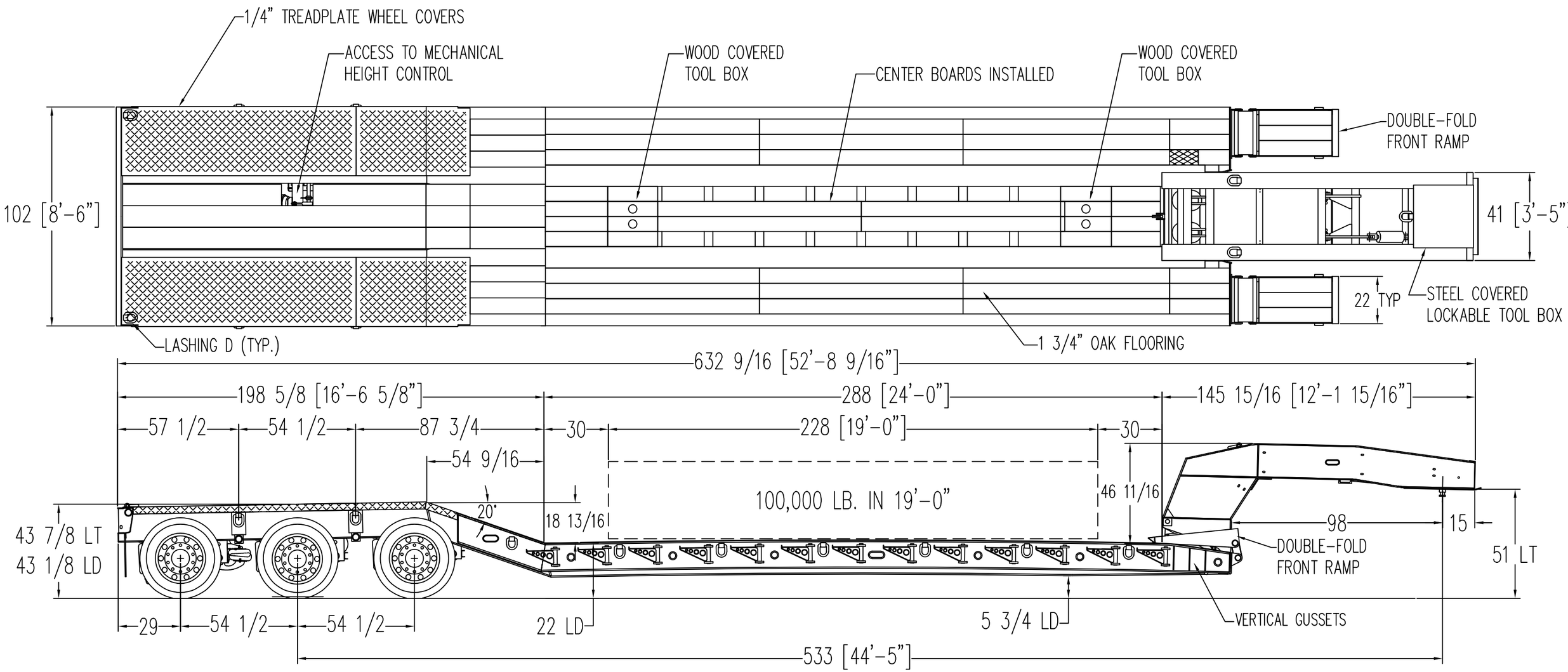

[12] - 275/70R,22.5 RADIAL TUBELESS TIRES
ALL AIR RIDE SUSPENSIONS
DUAL BAG AIR LIFT 3rd AXLE
ALUMINUN OUTER WHEELS

NOTE: ALL WEIGHT DISTRIBUTIONS ARE ESTIMATED !
ALL ILLUSTRATIONS,WEIGHTS, AND SPECIFICATIONS ARE APPROXIMATE.
THESE MAY VARY WITH MODEL CHANGES. DIMENSIONS ARE IN INCHES
SUBJECT TO ENGINEERING REVISION AS REQUIRED.

CD1654-50